MEM Deck-mounted basin spout without pop-up waste - Brushed Platinum

13 716 782 Product version from 7/1/2021

- 200mm projection
- fixed spout
- rectangular, air-enriched flow
- height of mixer 321 mm
- height up to aerator 190 mm
- hole diameter 35 mm
- rosette 60 x 60 mm
- 2x screw-in M 10 x 1 pressure hose, leak-tested
- 1/2" connection
- max. flow 5.7 l/min
- lead-free
- This product can help a building meet the requirements of Green Building Rating Systems, e.g. LEED®, BREEAM®, DGNB

Brushed Platinum	13 716 782-06
Chrome	13 716 782-00
Platinum	13 716 782-08
Dark Chrome	13 716 782-19
Brushed Durabrass (23kt Gold)	13 716 782-28
Brushed Champagne (22kt Gold)	13 716 782-46
Champagne (22kt Gold)	13 716 782-47
Brushed Dark Platinum	13 716 782-99

We reserve the right to change designs, product range and technical specifications without prior notice.
More information can be found at: www.dornbracht.com +49 (0) 2371 8899 900 mail@dornbracht.com

MEM Deck-mounted basin spout without pop-up waste - Brushed Platinum

13 716 782 Product version from 7/1/2021

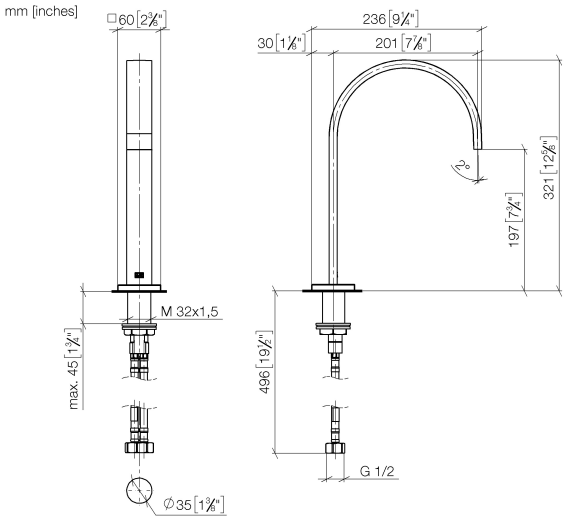

Flow rate chart

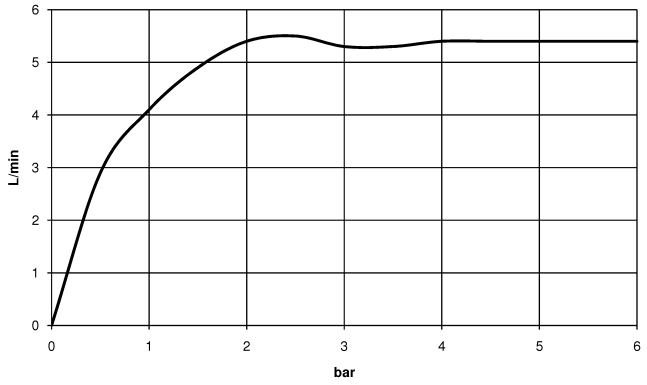

Codes & Standards

DIN 4109	Executive Order no. 1007	ISO 3822	Ü-Zeichen

13 716 782 Product version from 7/1/2021

Certificates

LGA_28	GDV_0400

MEM Deck-mounted basin spout without pop-up waste - Brushed Platinum

13 716 782 Product version from 7/1/2021

Parts for other finishes can be found here: Chrome

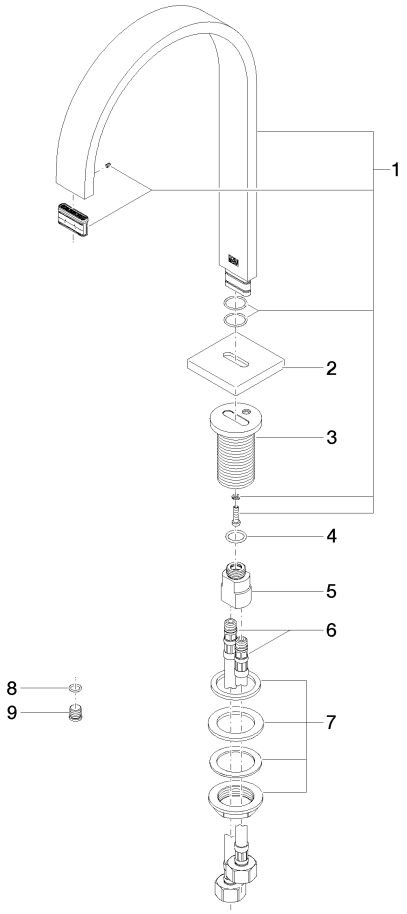

Spare parts list

No.	Item Number	Name	Quantity used	Delivery time
1	90 28 22 155 01-06	spout	1	10
2	09 27 78 034-06	rosette	1	10
3	09 11 10 054 10 90	connection	1	2
4	09 14 10 130 90	seal	1	2
5	09 11 10 055 10 90	connection	1	2
6	04 30 04 019 00 90	hose	2	2
7	04 23 10 009 01 90	fixing set	1	2
8	90 14 10 060 00 90	seal	1	2
9	09 31 20 065 90	plug	1	2

We reserve the right to change designs, product range and technical specifications without prior notice.
More information can be found at: www.dornbracht.com +49 (0) 2371 8899 900 mail@dornbracht.com